HEATPIPE FURNACE
FOR MODELS
17702W 17702P 17702S

User Maintenance Manual/Handbook

Isothermal Technology Limited, Pine Grove, Southport, PR9 9AG, England
Tel: +44 (0)1704 543830 Fax: +44 (0)1704 544799 Internet: www.isotech.co.uk E-mail: info@isotech.co.uk

GUARANTEE

This instrument has been manufactured to exacting standards and is guaranteed for twelve months against electrical break-down or mechanical failure caused through defective material or workmanship, provided the failure is not the result of misuse.

In the event of failure covered by this guarantee, the instrument must be returned, carriage paid, to the supplier for examination and will be replaced or repaired at our option.

FRAGILE CERAMIC AND/OR GLASS PARTS ARE NOT COVERED BY THIS GUARANTEE
INTERFERENCE WITH OR FAILURE TO PROPERLY MAINTAIN THIS INSTRUMENT MAY INVALIDATE THIS GUARANTEE

The company is always willing to give technical advice and assistance where appropriate. Equally, because of the programme of continual development and improvement we reserve the right to amend or alter characteristics and design without prior notice. This publication is for information only.

This handbook contains information that has been reproduced with the kind permission of Eurotherm. Such data is subject to the following notice.

Isothermal Technology Limited
Pine Grove, Southport, Merseyside, PR9 9AG, England
Telephone: +44 (0)1704 543830/544611 / Fax: +44 (0)1704 544799
Email: info@isotech.co.uk / Website: www.isotech.co.uk

CONTENTS

CE EMC INFORMATION

This product meets the requirements of the European Directive on Electromagnetic Compatibility (EMC) 89/336/EEC as amended by EC Directive 92/31/EEC and the European Low Voltage Directive 73/25/EEC, amended by 93/68/EEC. To ensure emission compliance please ensure that any serial communications connecting leads are fully screened.

The product meets the susceptibility requirements of EN 50082-1, criterion B.

Symbol Identification	Publication	Description
⚠	ISO3864	Caution (refer to manual)
	IEC 417	Caution, Hot Surface

⚠ ELECTRICAL SAFETY

This equipment must be correctly earthed.

This equipment is a Class 1 Appliance. A protective earth is used to ensure the conductive parts cannot become live in the event of a failure of the insulation.

The protective conductor of the flexible mains cable which is coloured green/yellow MUST be connected to a suitable earth.

The Blue conductor should be connected to Neutral and the Brown conductor to Live (Line).

Warning: Internal mains voltage hazard. Do not remove the panels.

There are no user serviceable parts inside. Contact your nearest Isotech agent for repair.

Voltage transients on the supply must not exceed 2.5kV.

Conductive pollution, e.g. Carbon dust, must be excluded from the apparatus. EN61010 pollution degree 2.

HEALTH AND SAFETY INSTRUCTIONS

1. Read this entire manual before use.

2. Wear appropriate protective clothing.

3. Operators of this equipment should be adequately trained in the handling of hot and cold items and liquids.

4. Do not use the apparatus for jobs other than those for which it was designed, i.e. the calibration of thermometers.

5. Do not handle the apparatus when it is hot (or cold), unless wearing the appropriate protective clothing and having the necessary training.

6. Do not drill, modify or otherwise change the shape of the apparatus.

7. Do not dismantle the apparatus.

8. Do not use the apparatus outside its recommended temperature range.

9. If cased, do not return the apparatus to the carrying case until the unit has cooled.

10. There are no user serviceable parts inside. Contact your nearest Isotech agent for repair.

11. Ensure materials, especially flammable materials are kept away from hot parts of the apparatus, to prevent fire risk.

12. Ensure adequate ventilation when using oils at high temperatures.

UNPACKING

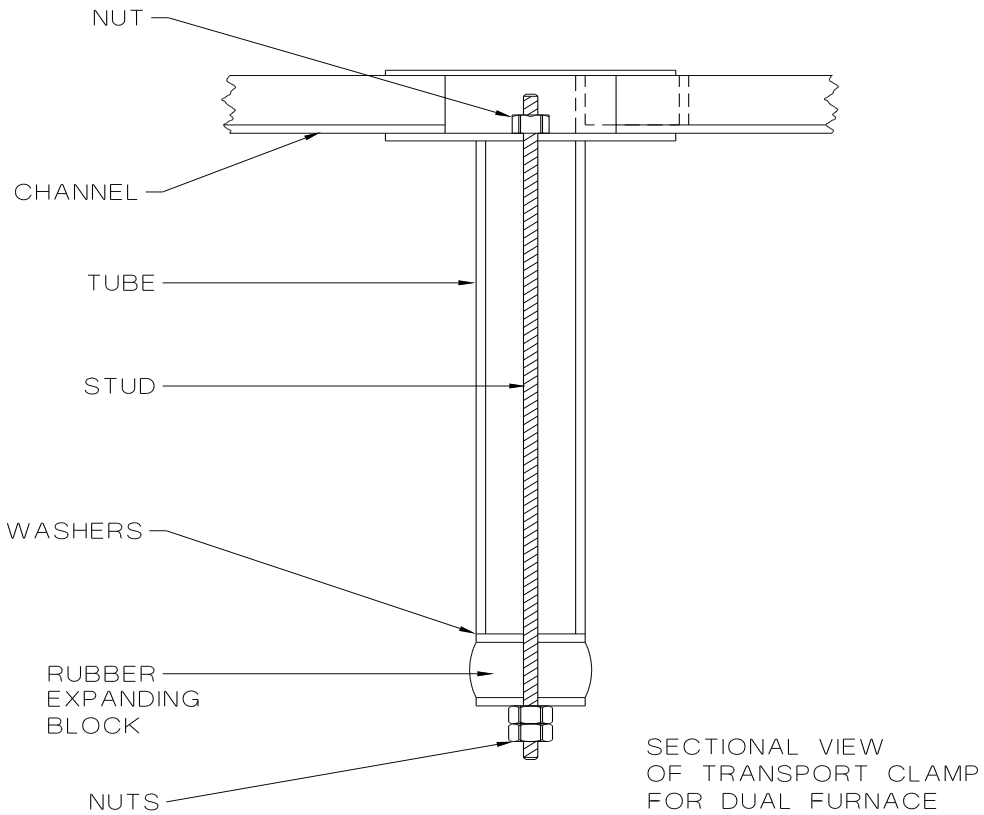

EVERY EFFORT HAS BEEN MADE TO PACKAGE THIS UNIT FOR TRANSPORT AND TO ENSURE ITS GOOD CONDITION ON ARRIVAL AT ITS DESTINATION.

BEFORE COMMISSIONING IT IS NECESSARY TO REMOVE THE FURNACE CORE TRANSIT CLAMP. TO AVOID DAMAGE PLEASE FOLLOW INSTRUCTIONS:

1. Slacken the central nut using the required tube spanner; the insertion of a screwdriver through the tube spanner will prevent the central stud turning.

2. Remove the 3 screws securing the transit clamp to the top of the unit. Slacken each screw by degrees equally.

3. Gently lift the transit clamp vertically; the attached tube and rubber securing block will thereby be extracted from the furnace core.

4. Normal commissioning procedure may now be followed.

5. Keep the transit clamp and use it if the furnace is ever transported.

INSTALLATION OF THE THERMOMETER SUPPORT (REMOVED FOR TRANSIT)

This furnace is supplied with the thermometer support for the safe storage of up to four thermometers, but removed for transit purposes. Please see the below image for a guide to the installation of the support to the furnace.

1. Thermometer support
2. Screw locations

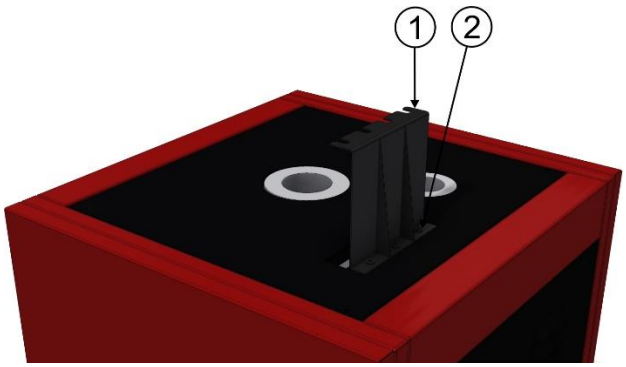

Please screw the thermometer support to the furnace in the way shown above using the screws supplied. Tighten sufficiently.

Please take care when inserting or removing thermometers from the pocket below the support.

SAFETY

CAUTIONARY NOTE

Products of Isothermal Technology Ltd are intended for technically trained and competent personnel familiar with good laboratory practice. It is expected that personnel using this equipment will be knowledgeable and skilful in the management of apparatus which may be under power or under extremes of temperature (molten metals, cryogenic liquids, etc.) and will appreciate the hazards which may be associated with, and the precautions to be taken with, such equipment.

THIS EQUIPMENT MUST BE EARTHED

The furnace is supplied with a fuse carrier fitted with a neutral link. This is clearly labelled and is for use with a mains system with a neutral line, such as the UK supply. If the furnace is to be used on a system where both supply lines are live with respect to earth then the neutral fuse link should be replaced with a fuse. A spare fuse is supplied with the furnace.

FUSE AND NEUTRAL LINK REPLACEMENT

Hazardous voltages are exposed when the rear furnace panel is removed. Before removing the panel, you must isolate the furnace from the electrical supply. To replace the main electrical fuse or to replace the neutral link bar it is necessary to remove the rear panel; see warning above. The panel will become free after the four corner screws are removed.

The fuse holders will be seen at the lower right-hand side of the cabinet. The left-hand fuse holder will always contain a fuse. The right-hand fuse holder will leave Isotech with a neutral shorting bar, they are clearly labelled. As explained elsewhere, if your local supply does not have a neutral line but has both lines live with respect to earth this link should be replaced with a fuse and the holder labelled to this effect.

The top half of the fuse carrier lifts from the lower body.

GENERAL LAYOUT

Front View

1. USB socket
2. Ethernet socket
3. Main controller
4. Overtemperature controller
5. Mains power on switch

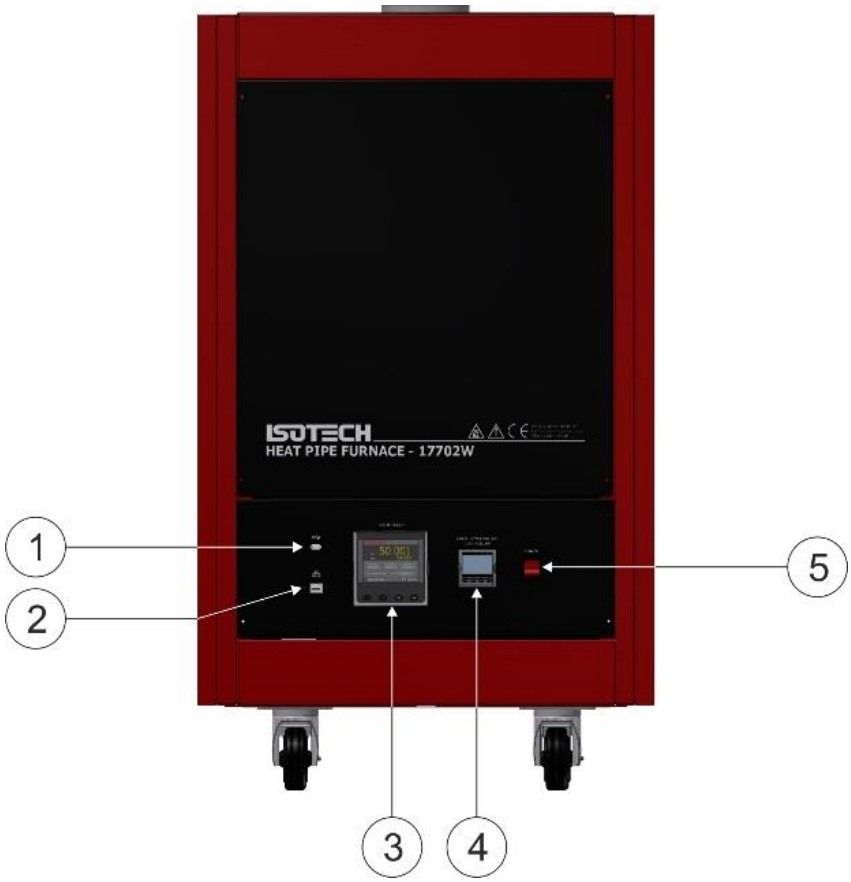

Top View

1. Heatpipe furnace
2. Pre-warming pocket

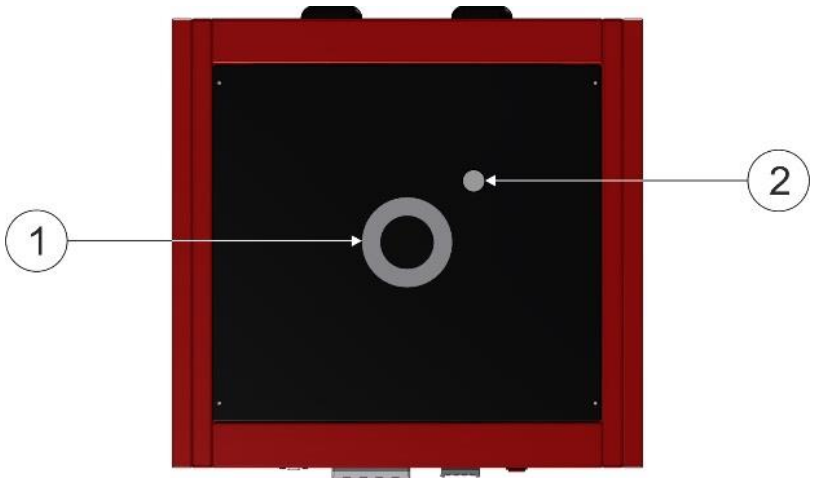

Rear View

1. Cooling coil connection (not on W version)
2. Cooling coil connection (not on W version)
3. Mains Power cable

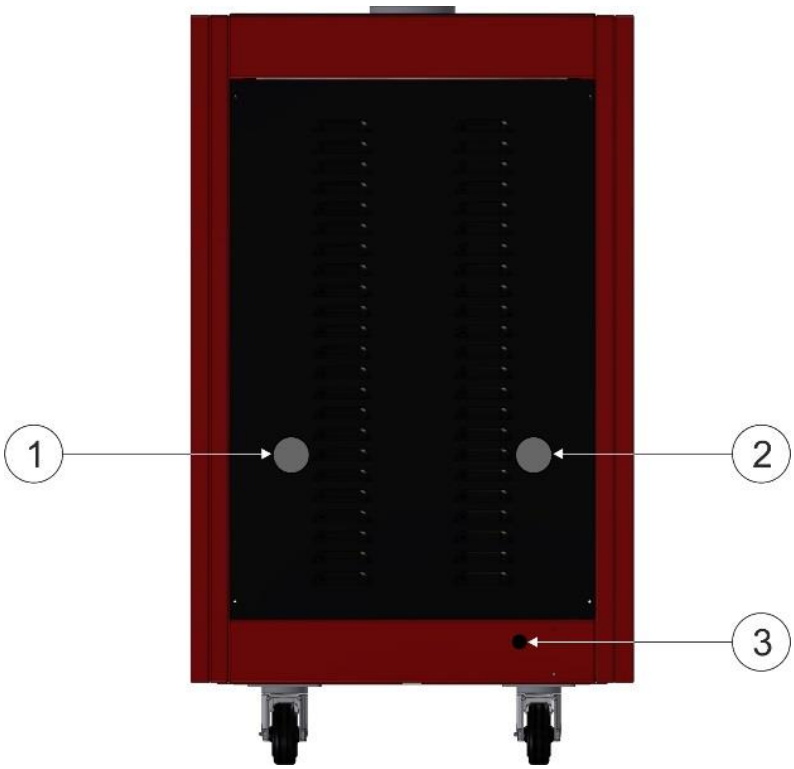

INTRODUCTION

- Essentially Gradient Free
- Heat pipe Operation from Indium to Copper
- Simple Use - no zone offsets to adjust

Isotech metrology furnaces have more than 35 years of proven use and are widely used by the worlds' leading NMIs. For the optimal use of fixed point cells, the temperature uniformity should be less than 10mK over the length of the fixed point sample CCT/2000-13, "Optimal Realization of the Defining Points of the ITS-90..."

Isotech heat pipe furnaces offer essentially gradient free operation; heat pipes provide the ideal conditions for the creation and maintenance of ITS-90 fixed point cells. Unlike some other companies Isotech can provide heat pipe furnaces to suit Indium, Tin, Zinc, Aluminium, Silver and Copper fixed points.

Plateau length is determined by the difference in temperature between the heat pipe and cell - this can be adjusted to give a plateau of any length of up to tens of hours. Our controllers offer extra resolution and allow adjustment to 0.1°C right up to 1100°C. The Potassium and Sodium models have a cooling coil in the lid with connections to circulate tap water to keep the furnace lid cool protecting the SPRT and reducing heat load into the lab. A pre-warming tube with a temperature approximately equal to that of the heat pipe made of a unique, gas-tight material is provided to heat the SPRT prior to it being placed in a cell. The furnaces feature an adjustable, independent over temperature device to protect expensive cells and SPRTs as well as a second internal over temperature safety device.

THE HEATPIPE FURNACES

MODEL 17702W

Contains a water heat pipe with a range from 125°C to 250°C, this encompassing the fixed points of indium and tin.

MODEL 17702P

Contains a potassium heat pipe with a temperature range from 400°C to 1000°C, thus encompassing zinc, aluminium and silver freeze points.

MODEL 17702S

Contains a sodium heat pipe with a temperature range from 450°C to 1100°C, thus constituting a facility for aluminium, silver, gold and copper freeze point measurements.

USING THE OVERTEMPERATURE CONTROLLER

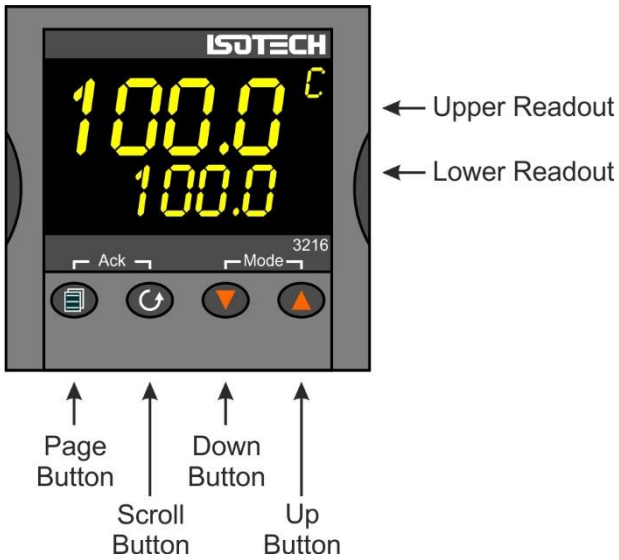

The furnace uses an alarm value on the controller to disable the heaters if the furnace goes into the alarm condition. If the furnace goes into the alarm condition, it will power down the Main controller and circuitry.

Adjusting the Overtemperature value on the controller:

1. Press the Scroll button to display **A1 HI**
2. Use the up/down buttons to scroll to the desired alarm setting. This would normally be 10-20°C above the target temperature
3. To enter the value you will need to press the **PAGE** and **SCROLL** buttons simultaneously
4. To re-set the controller from an alarm condition you will need to press the buttons **again** simultaneously
5. If the controller is in the alarm condition and the complete furnace is powered down, the controller will “remember” the condition and will still need to be manually reset when powered up again

QUICK START

Locate the furnace in a suitable, level location. Leave a minimum of 150mm of space around and 500mm above the furnace for air circulation. Ensure there is a suitable water supply or circulation system for the cooling of the furnace (see page 28) and power supply nearby.

Assemble the furnace as on page 29, ensure the coolant is connected as in on page 28 and the equipment has a suitable electrical connection as on page 9. Connect the furnace to the electrical supply and power it up.

The Overtemperature controllers will power up and display the current temperature.

To power up the Heatpipe furnace you will need to enable the controller. To do this, press the SCROLL button on the Overtemperature controller until Hi Alarm is displayed, using the up/down buttons enter a new temperature for the overtemperature protection. Initially this can be quite a low value, say 500°C*, for test purposes. Now press the SCROLL and PAGE buttons together, once to enter the new value and a second time to reset the controller. On the second press the furnace will make a noise as the control circuit powers up.

The furnace is now active and ready for use. On the controller, press the SCROLL button to highlight the Setpoint box. Press again to adjust the value and select a suitable value, a value 20°C below the overtemperature is suitable, using the up/down buttons. Enter the value by pressing the Scroll button. The furnace will now rise in temperature to the selected value.

If the furnace has been in transit or not been used for several days then there may be an ingress of moisture into the insulation and other ceramics, the furnace may need to be “dried out” by running at a low value such as 400/450°C** for a period of several hours.

* 100°C for W version
** 150°C for W version

USING THE CONTROLLER

The controller installed on this equipment uses an advanced three loop controller with a multi-channel sensor input.

Other features of the controller are:

- Built in data logging
- Ethernet connection
- USB host for controller updates and data export
- Bright colour display
- Dynamic optimisation of the control PID parameters
- Eight point zone linearization for Main and Annealing furnace
- Built in Programmer, supports 100 programs, each of 25 segments

Before using the controller, please read this manual thoroughly to get the best performance from the equipment.

Certain features used in this controller require different levels of access. The Operator access requires no passcode to use. These functions include:

- Changing the setpoint
- Changing any values using the USER ACCESS PAGE

Other features will require the user to log in as “Supervisor” to carry out these functions. These include:

- Adjusting the PID settings
- Using the Programmer function
- Changing the linearity settings
- Extracting data from the recorder function

Configuration changes to the controller require you log in as “Engineer” to perform these functions. These include:

- Change language selection
- Change °C to °F or K
- Change equipment clock and time zone

How to log in as the SUPERVISOR:

1. Press the Page button to display the Home menu
2. Scroll to LOG IN
3. Press the SCROLL button
4. Press up to scroll to SUPERVISOR in dialogue box
5. Press the SCROLL button to prompt for a passcode
6. Select code **15** from the soft keyboard
7. Press PAGE button to prompt to accept the changes
8. Select Yes and enter with SCROLL button to display the SUPERVISOR screen (as above)
9. When logged in as the SUPERVISOR the equipment will control in the normal way

How to log in as the Engineer:

1. Press the Page button to display the Home menu
2. Scroll to LOG IN
3. Press the SCROLL button
4. Press up to scroll to ENGINEER in dialogue box
5. Press the SCROLL button to prompt for a passcode
6. Select code 17 from the soft keyboard
7. Press PAGE button to prompt to accept the changes
8. Select Yes and enter with SCROLL button to display the ENGINEER screen
9. When logged in as the ENGINEER, the equipment will **not** control the temperature of the heat source

The Isotech splashscreen and controls:

*The **USER INTERFACE** start up screen and controls:*

1. **ISOTECH** splashscreen
2. **PAGE** button
3. **SCROLL** button
4. **DOWN** button
5. **UP** button

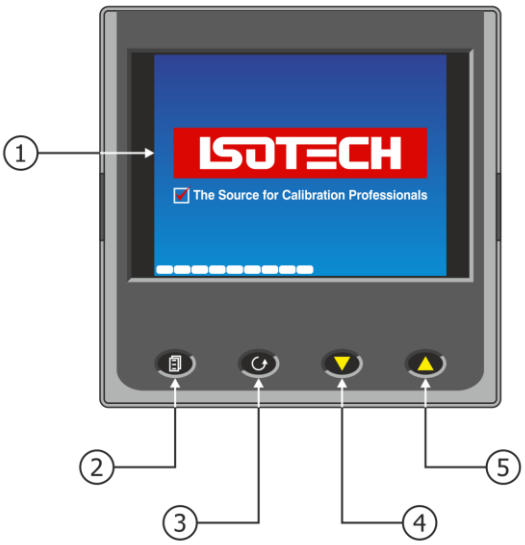

*The **HOME** page:*

1. Heatpipe temperature
2. Heatpipe setpoint
3. Setpoint adjust box
4. Data Record icon
5. **PAGE** button
6. **SCROLL** button
7. **DOWN** button
8. **UP** button

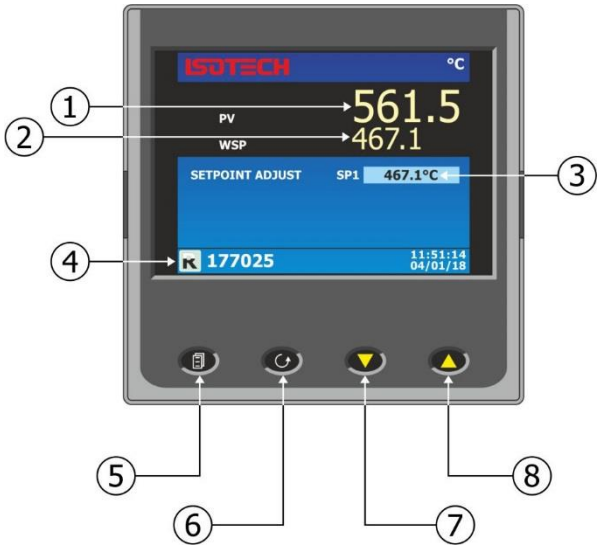

The **USER ACCESS** page:

1. Heatpipe autotune feature
2. IP type (toggle between fixed and DHCP)
3. PB adjust
4. TI adjust
5. TD adjust
6. Controller filter time adjust
7. Global UNITS adjustment

Principle of operation

The principle of the operation of heat pipes is as follows. The inside walls of the inner and outer tubes are covered with a fine wire mesh screen. When heated, the small amount of sodium with which the heat pipe is charged vaporises throughout the interior cavity and condenses on the walls of the cavity. Assuming that the interior is isobaric, the vapour-liquid transition at the walls is a thermal equilibrium condition which can only occur at constant temperature. The condensed liquid is returned to the bottom of the structure (for re-vaporisation) by capillary action at the mesh screen.

In order to prolong the life of the heat-pipe it is necessary to control the rate of temperature increase while the sodium is in its solid phase. The controller has been programmed automatically to ramp the heat-pipe temperature at a controlled rate until it approaches 450°C for Sodium, 400°C for Potassium, at which temperature the medium can be considered molten and the temperature is then allowed to rise at the full rate.

The controller uses internal alarm features to determine the point which the controlled ramp terminates and is used to control the ramp rate. These parameters are set at 445(°C) for Sodium and 395(°C) for Potassium and 7.5(°C/min) and should not be changed.

Changing the Set Point

The main controller will control the Heatpipe furnace. The setpoint is accessible from the Home page of the controller. The controller circuit will be enabled/disabled by the overtemperature controller on the right of the main controller.

The Heatpipe furnace set point will adjust the main heatpipe temperature.

To compensate for any errors in the linearity of the display temperature, the user can adjust the linearity using the 8 point adjustment curve for each furnace. See section below for details on how to do this.

To change the Setpoint of the equipment:

1. From the ISOTECH homepage, press the SCROLL button once, this will highlight the SETPOINT ADJUST box.
2. Press the SCROLL button once more and this will allow adjustment of the setpoint via the UP/DOWN buttons.
3. Scroll to the desired set point as described above.
4. When the temperature is set, press the SCROLL button again to enter and save the setting.
5. The equipment will now raise or lower the furnace temperature as required.

How to globally change from °C to °F or Kelvin:

1. Log in as the Engineer
2. Scroll to INSTRUMENT
3. Scroll to DISPLAY
4. Scroll to UNITS
5. Select by pressing the Scroll button
6. Use up/down to select from °C, °F or Kelvin
7. Press the Page button to exit and save the selection

PROCESS TO APPLY A USER LINEARIZATION TO THE HEATPIPE FURNACE

From time to time the control sensors inside the furnace will need to be adjusted as the sensor drifts with time and use at high temperature. The controller has the capability to compensate for these errors using an eight point correction curve. This will need to be regularly checked for errors and can easily be corrected within the controller using the following procedure.

The image below illustrates a simplified graphical view of the process.

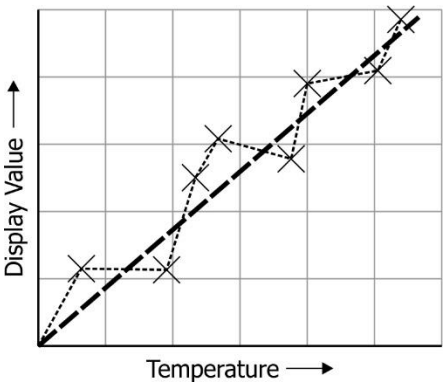

Isotech standard offset values are set at the following temperatures:

This is listed as Channel 1 on the controller

17702S	17702P	17702W
450°C	420°C	125°C
660°C	660°C	156°C
960°C	960°C	230°C
1080°C	---	---

Non populated points are unused as standard.

Please follow the procedure below to linearise the controller display value:

1. For the heatpipe furnace, set the furnace up as it will be used with a fixed point cell using either a cell or a simulation of the cell using a thermally efficient metal block suitable for use over the temperature range (Inconel 600 would be ideal)
2. Place a reference thermometer inside the cell
3. Set the furnace to the lowest useable temperature (recommendation would be to use the temperatures listed above)
4. Allow the system the thermally stabilise
5. Press the PAGE button to enter the SUPERVISOR menu
6. Scroll to the CHANNELS tab and enter with the SCROLL button
7. Select CHANNEL 1
8. Scroll to the ISOTECH tab and enter with the SCROLL button
9. Scroll to CAL STATUS and enter with the SCROLL button
10. Scroll to POINT 1 and enter the value from the reference thermometer

The controller is now ready to accept a value. Ensure the equipment is thermally stable, you will now need to use the temperature value displayed by the reference thermometer.

1. Record the value on the reference thermometer and scroll to DISPLAY VALUE tab and press enter
2. This will bring up a soft keyboard, use this keyboard to enter the exact temperature displayed by the calibrated reference standard
3. Press the PAGE button to enter the value, the controller will ask you to confirm the settings. Select YES and enter the value
4. The controller will now accept the value and move to POINT 2 on the display
5. Exit back to the homepage and check the value on the relevant display window
6. When confirmed, move to the next temperature and repeat the process for point 2 and so on

Important Note: Ensure that Point 1 is always used as the lowest temperature and offsets are entered in ascending order. If the values are place out of order then the controller will disregard them.

Enabling the AUTOTUNE feature:

The equipment has the ability to AUTOTUNE the control parameters to hone the temperature stability at a specific block temperature. When enabled it will allow the controller to cycle the temperature of the block and calculate the best values for this temperature. After two cycles it will install the calculated values and use these for the control loop.

You are not required to log in to access this feature.

To enable the AUTOTUNE feature:

1. Scroll to the USER ACCESS page
2. Press the Scroll button and then select the AUTOTUNE feature using the down button
3. Press the Scroll button again to highlight the feature
4. Use the up/down button to select ON
5. Press the Scroll button again to enter the value.
6. The controller will now begin the tuning process

During the tuning process, AT can now be seen to the left of the clock on the ISOTECH homepage.

To disable the tuning feature during a tune, repeat the process above and select OFF. This will now disable the tune and install the previous values.

How to change the Date and Time or the Language of the equipment:

The Date and time of the equipment can be changed to suit local time. This can also incorporate the any daylight-saving time in the time zone of your country or region. The display language of some of the display screens can also be change to suit the local language.

The options for this are:

- English
- French
- German
- Italian
- Spanish

Note: Only the Supervisor and Engineer menus will read in the alternative language. The Isotech Home screen will still read in English when this feature is used.

To change the DATE and TIME or LANGUAGE:

- To access these features, you will need to log in as the Engineer.
- When logged in, scroll to the INSTRUMENT tab on the Engineer homepage
- Press the SCROLL button to enter
- Scroll to CLOCK and enter by pressing SCROLL button
- Alternatively scroll to LOCALE and enter by pressing SCROLL button
- Adjust as necessary and exit engineer mode

The NETWORK INTERFACE:

Access to the NETWORK interface is available when logged in as the ENGINEER. This will allow adjustment to various network parameters, should they need to be adjusted.

This menu allows writeable access to:

- IP type (FIXED or DYMAMIC)
- IP address
- Subnet Mask
- Gateway

and Read only access to:

- MAC address
- Client identifier

To access the NETWORK INTERFACE:

1. Log in as the ENGINEER
2. From the ENGINEER page scroll to NETWORK tab and enter with the SCROLL button
3. Scroll to INTERFACE and enter with the scroll button
4. Scroll to and adjust desired parameter using the pop out soft keyboard

Data Logging:

The equipment will always record data for all four channels UNLESS the equipment is in ENGINEERING mode. This is indicated by the green **R** in the bottom left had side of the ISOTECH homepage (page 17).

The data can either be extracted via the USB socket on the front panel or to a PC by means of the FTP protocol (Remote Archiving) using REVIEW software, see page 22 for details.

To back up the data via USB stick on the control panel use the following procedure:

1. Log in as the SUPERVISOR
2. Plug a suitable USB memory stick to the socket on the control panel
3. Ensure the controller has accepted the memory stick by the icon in the lower left of the ISOTECH homepage
4. Press the page button to scroll to the SUPERVISOR menu
5. Scroll to DEMAND ARCHIVING
6. Scroll to ARCHIVE TO and enter, select USB from the options and enter
7. Scroll to ARCHIVE and select from:
    a) Bring to date
    b) All
    c) Last month

d) Last week
e) Last day
f) Last hour
g) None

8. When the selection is entered by pressing the SCROLL button, the transfer will begin (this may take several minutes depending on the selection made)
9. When the transfer is complete, remove the USB stick and exit SUPERVISOR mode

The data will be stored in a folder called HISTORY.

FTP Server Archiving:

This allows the archiving of recorder files to a remote computer via the RJ45 type connector at the rear of the recorder, either directly or via a network.

In order to carry out a successful transfer:

1. Details of the remote host must be entered in the Network Archive area of configuration
2. The remote computer must be set up as an FTP server. Help from the user's IT department may be necessary in order to achieve this.
3. The remote computer must also be set up to respond to 'pings'. This is because the instrument pings the host whilst establishing connection, if it does not receive a response the archive attempt fails.
4. When accessing files using Microsoft® Internet Explorer, the address (URL) field can be in one of two formats:
5. ftp://<instrument IP address>. This allows a user to log in as the anonymous user (if the recorder has any account with the user name set to 'anonymous' with a blank password.
6. ftp://<user name>:<password>@<instrument IP address> to log in as a specific user.

For IE5 users, Microsoft® Internet Explorer displays, by default, history files only. To quit the history folder, either uncheck the Tools/Internet Options/Advanced/Browsing/'Enable folder view for FTP sites' option, or check the Tools/Internet Options/Advanced/Browsing/'Use Web based FTP' option.

PROGRAMMER Function:

The equipment has an on-board PROGRAMMER function built in. The PROGRAMMER runs in SEGMENTS and can store up to 100 programs, each containing 25 segments.

This feature is particularly useful for an automated calibration run, the test data can then be extracted and converted to a spreadsheet using the REVIEW software available.

The programs can either be created using the available software, or using the control interface on the equipment.

The software can be downloaded at www.isotech.co.uk/downloads. Once created, a program can be sent directly to the instrument via the network connection or saved to a USB memory stick and imported from there via the USB socket on the controller panel

Instructions and details of installation are supplied with the download.

Below is the procedure to install a program for Channel 1 (Heatpipe furnace)

To install for The Annealing furnace, ensure Channel 2 is enabled in the settings:

1. Log in as the Engineer
2. Scroll to PROGRAMMER and enter
3. Scroll to SET UP and enter
4. Scroll to CHANNELS and enable channel 2

To create, install and run a PROGRAM via the controller interface please follow the instructions below:

See below for a more detailed description of each of the PROGRAM functions.

PROGRAM Details:

Operation
This allows the user to select one of the following:
Load. Opens the program store and allows the user to select a program to be loaded.
Store. Allows the current program to be saved to the internal program drive. This is useful if you wish to snapshot the current program and store this under a different program name.
Delete. Allows the selected program to be deleted.
Delete All. Deletes all programs.
Copy. Copies the selected program for 'pasting' either from the internal drive to the USB device, or vice-versa. This is useful if you wish to transfer a program to other instruments.
Copy All. As above, for 'Copy', but copies all the programs in the selected directory.

Note: If a 'Store', 'Copy' or 'Copy All' operation would result in there being a total of more than 100 program files in the internal drive, the operation fails and an error message is displayed.

Status
Success. Previous operation was successful.
Failed. Previous operation failed.
Loading. The program is loading.
Copying. The program copy process is underway.
Deleting. The relevant program is being deleted.

Program
The name of the program currently loaded.

Holdback Style
Appears only if 'Holdback' is enabled. See 'Holdback', below.

Program
Holdback applies to all appropriate segments.
Per Segment: Holdback enabled on a segment by segment basis as described in 'Segment configuration below.

Ch1 Holdback
Appears only if 'Holdback Style' (above) is set to 'Program'.
Off: Holdback is disabled
Low: Holdback is entered when PV < (PSP - Holdback Value)
High: Holdback is entered when PV > (PSP + Holdback Value)
Band: Holdback is entered when PV < (PSP - Holdback Value) or PV > (PSP + Holdback Value)

Ch1 Holdback value
The value to be used in triggering holdback.

Ch2 Holdback
As for Ch1 Holdback, above but for channel 2.

Ch2 Holdback value
As for ‘Ch1 Holdback value’, above, but for channel 2.

Ramp Style
Ramp style applies to all ramp segments in the program. Ramp Style can be edited only when the program is in Reset mode. Setpoints, rates, times etc. are set in the individual segment configurations
Rate. A Ramp Rate segment is specified by a target set-point and the rate at which to ascend/descend to that set-point.

Time.
A Ramp Time segment is specified by a target set-point and a time in which to achieve that set-point.

Ch1 Ramp Units
Select ‘Per Second’, ‘Per Minute’ or ‘Per Hour’ for ramp timing units. Ramp Units can be edited only when the program is in Reset mode.

Ch2 Ramp Units
As for ‘Ch1 Ramp Units’ above.

How to create a simple PROGRAM using the controller interface:

Below shows a basic PROGRAM that demonstrates the furnace instrument ability to create a program.

Segment	1	2	3	4	5	6	7
Type	Ramp	Dwell	Ramp	Dwell	Ramp	Dwell	End
Ch1 TSP	150	150	300	300	450	450	
Ch1 Time	120	120	120	120	120	120	
Ch1 Holdback	Off	Off	Off	Off	Off	Off	

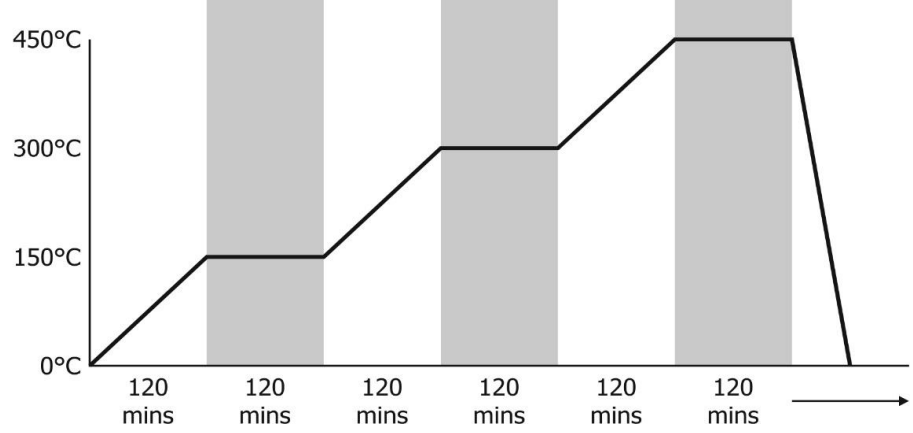

This PROGRAM has 7 segments.

It shows the furnace instrument starting with a setpoint of 0.00°C

- It is then set to RAMP to 150°C over a period of 120 minutes
- It is then set to DWELL at this temperature for a period of 120 minutes
- It is then set to RAMP to 300°C over a period of 120 minutes
- It is then set to DWELL at this temperature for a period of 120 minutes
- It is then set to RAMP to 450°C over a period of 120 minutes
- It is then set to DWELL at this temperature for a period of 120 minutes
- It is then set to END and RESET to 0.00°C

To enable/RUN this PROGRAM:

1. Log in as the SUPERVISOR and exit menu
2. Scroll to the PROGRAM page
3. Press the SCROLL button to highlight the RESET box
4. Press the UP button to highlight the PAGE icon in the top right-hand side of the screen
5. Enter this with the SCROLL button
6. This will access the PROGRAM EDIT menu page
7. Scroll to OPERATION and select LOAD, enter with the SCROLL button
8. Scroll to TEST_1 and enter with the SCROLL button
9. The STATUS will display SUCCESS and the CURRENT PROGRAM will display TEST_1
10. TEST_1 is now the default program
11. To RUN the program TEST_1 exit the PROGRAM EDIT page using the PAGE button until you see the PROGRAM homepage
12. Press SCROLL once to highlight the RESET box
13. Scroll to TEST_1 and press the SCROLL button to initiate the program

The page will now change to show the current program running.

To edit an existing PROGRAM:

1. Follow the above procedure to point 10
2. Scroll down to SEGMENT NUMBER and select the SEGMENT you wish to edit using the SCROLL and UP/DOWN buttons
3. Edit the required parameter (RAMP, DWELL, TIME DURATION etc) using the scroll and UP/DOWN buttons and enter the value
4. When the editing is complete, it can either be left as the existing PROGRAM or saved under an alternative file name in the internal memory
5. To leave the alterations under the existing filename simply exit out of the menu and RUN the program as normal
6. To save as an alternative filename in the memory, SCROLL back up to OPERATION and enter using the SCROLL button
7. Scroll to STORE and enter
8. The soft keyboard will open allowing you to save the file as a filename of your choice
9. When the name is selected, press the PAGE button to save the changes
10. Both the original file and the modified file will now exist in the memory

Using the HOLDBACK feature:

The PROGRAMMER has a HOLDBACK feature available.

Holdback pauses the program (freezes the Programmer setpoint (PSP) and the time remaining parameters) if the difference between the Process value (PV) and the PSP exceeds a user-specified amount (Holdback value). The program remains paused until the PV returns to within the specified deviation.

In ramp or step segments, holdback indicates that the PV is lagging the SP by more than the specified amount and that the program is waiting for the process to catch up. In a dwell segment, holdback is used to guarantee that a work piece stays at set-point within a specified tolerance for the specified dwell duration.

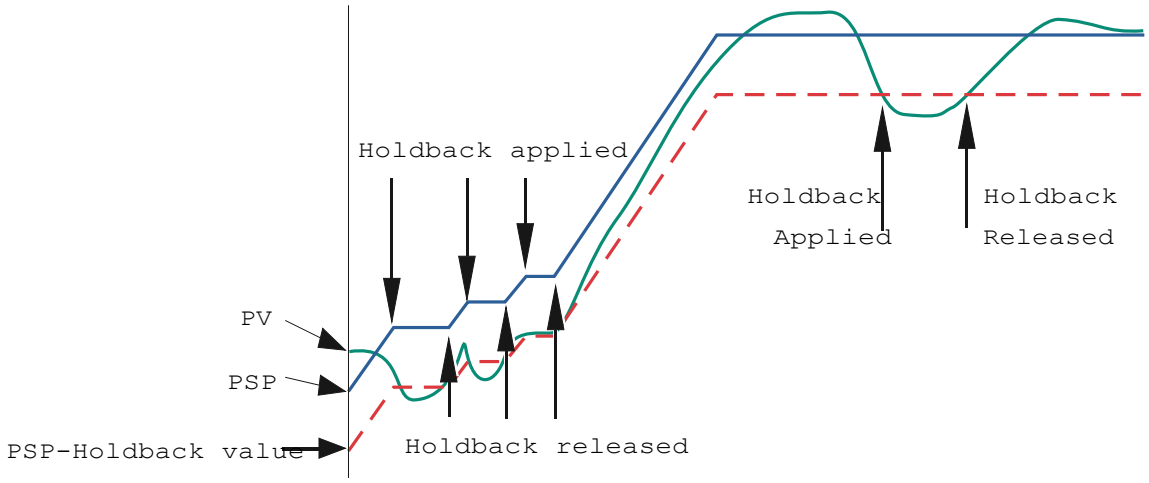

This is particularly useful when running a calibration program as it will allow the heat source to eliminate any “lag” between the controller and the heat source itself.

Holdback can be configured to hold either the segment or the complete program.

The USER defined value is used to define the actual value applied to it.

This can either be:

LOW, where the heat source temperature is below the Setpoint. The programmer will hold the value until the heat source has “caught-up” in temperature.

HIGH, where the heat source temperature is above the Setpoint. The programmer will hold the value until the heat source has “caught-up” in temperature.

BAND, where the heat source is outside a band of temperature around the setpoint

To enable this feature:

1. Go to EDIT AN EXISTING PROGRAM and enter the menu
2. Scroll to HOLDBACK STYLE and enter using the SCROLL button
3. Select desired parameter and enter using the SCROLL button
4. Scroll to CH1 HOLDBACK and enter the desired parameter and enter with the SCROLL button
5. Scroll to CH1 HOLDBACK VAL and select the desired temperature, enter using the SCROLL button

CONNECTING THE FURNACE TO A LIQUID COOLANT SUPPLY (NOT REQUIRED FOR MODEL 17702W)

This furnace has a cooling coil installed on the top panel, this is to allow a cooler top panel working surface that will prevent a hazard to the user when the furnace is at high temperatures and will also minimise any distortion to the top panel that may lead to damage caused as a consequence of this. Temperatures in excess of 700°C require the cooling coil to be used, for temperatures below this value it is optional.

The cooling coil is accessed from the rear panel and this will need to be removed to make any connections or service of the connections.

The cooling medium can be any number of substances, but in most cases water will suffice. Isotech would recommend a cooled re-circulation system for environmental reasons, however, a simple connection to a water tap will produce the same results. Please seek advice from your local environmental agency before cooling from a tap supply.

The requirement will be up to 2 litres of liquid/minute. Connections require a tube or pipe with 3/8” internal diameter for both the input and output. The exiting liquid will never rise above 50°C so a simple PVC piping can be used.

There is no directional flow and the liquid can be flowed in either direction.

CALIBRATION APPARATUS FOR ZINC, ALUMINIUM AND SILVER FIXED POINTS

GENERAL ASSEMBLY OF FIXED POINT CELL INSIDE THE HEATPIPE

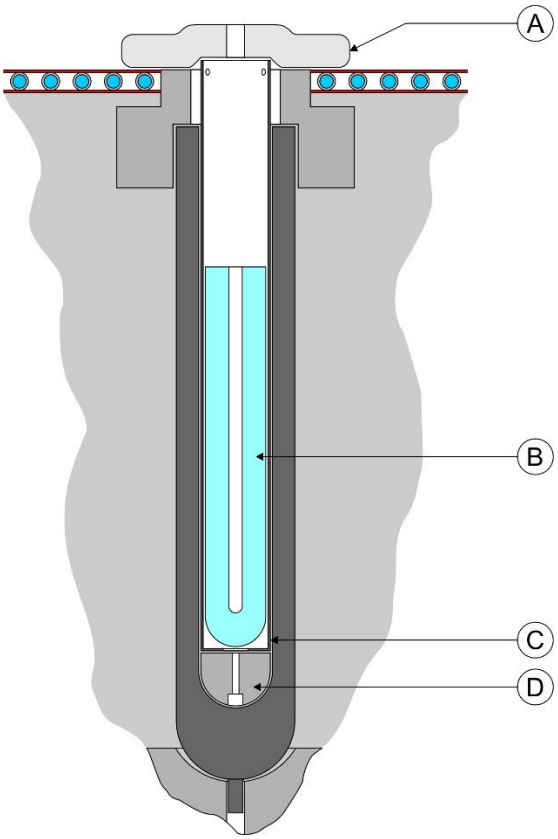

A Insulation: Superwool 670HT 932-20-52 (to keep thermometer head cool)

B Fixed Point Cell

C Inconel Cell Basket

D Ceramic Spacer 420-02-08 (at bottom of heat pipe)

INTRODUCTION

Using high temperature thermometers presents many problems due to strain and contamination, which can very easily be introduced into the thermometer during thermal cycling.

Limited understanding of the relevant mechanisms has resulted in a dearth of published information and of available apparatus for the safe treatment of these sophisticated devices.

DESCRIPTION

Sufficient information now exists at Isotech to allow introduction of a new apparatus, specifically designed not only to realise and maintain the ITS 90 fixed points of zinc, aluminium and silver, but also to pre- and post-condition the thermometers to be calibrated. To this end a second furnace has been incorporated, which, because of its design, will permit conditioning to be carried out safely and without introducing contaminants into thermometers.

Complementary features of the apparatus are a pre-calibration tube (held at the temperature of the fixed point) made of a unique and gas tight material, together with a rack for storage of up to 4 thermometers at approximately ambient temperature.

METHOD OF OPERATION

1. By adjusting set-point to a few degrees above the appropriate melting point, the cell (zinc, aluminium or silver) is melted in an essentially temperature gradient free potassium-filled heat-pipe. When melting is complete, the heat-pipe temperature is readjusted to a level 0.5°C below the freeze temperature of the cell. When this set-point has been reached a cold rod is introduced into the re-entrant tube of the cell to initiate the freeze, giving a plateau that can be maintained for between 12 and 24 hours.

2. The thermometers are removed from their storage rack and placed in the pre-conditioning furnace. The furnace is slowly heated to 400°C (if the cell is zinc), 650°C (for aluminium) or 900°C (for silver).

   During conditioning, thermometers are protected from contamination by a slow air flux around them.

   CAUTION: it is essential, when thermometers are inserted into furnaces, to keep their heads cool. This can be accomplished by blowing air, at ambient temperature, across them by means of a free-standing fan.

3. Thermometers are transferred individually to the cell for 20 to 30 minutes, for calibration, and then returned to the post-conditioning furnace.

4. When all the thermometers have been calibrated, the post-annealing furnace is slowly cooled to 450°C after which they can safely be exposed to room temperature and, thereafter, measured at the triple point of water.

   Throughout the time the thermometers are above 450°C the temperature changes are slow enough to prevent strain, and the slow flow of air prevents contamination at high temperatures.

CALIBRATION APPARATUS FOR ALUMINIUM, SILVER AND COPPER FIXED POINTS

INTRODUCTION

Using high temperature thermometers presents many problems due to strain and contamination which can very easily be induced into the thermometer during temperature cycling.

Limited understanding of the relevant mechanisms has resulted in a dearth of published information and of available apparatus for the safe treatment of these sophisticated devices.

DESCRIPTION

Sufficient information now exists at Isotech to allow introduction of a new apparatus, specifically designed not only to realise and maintain the ITS-90 fixed points of aluminium, silver and copper, but (housed in the same facility) incorporating a second furnace which, because of its design, can be used safely and without contamination, to pre-heat and anneal the thermometers for calibration.

Complementary features of the apparatus are a pre-calibration tube (held at the temperature of the fixed point) made of a unique and gas tight material, together with a rack for storage of up to 4 thermometers at approximately ambient temperature.

METHOD OF OPERATION

CAUTION: it is essential, when thermometers are inserted into furnaces, to keep their heads cool. This can be accomplished by blowing air, at ambient temperature, across them by means of a free-standing fan.

1. By adjusting the set-point to a few degrees above the appropriate melting point, the cell (aluminium, silver or copper) is melted in an essentially temperature-gradient-free sodium-filled heat-pipe. When melting is complete, the heat-pipe temperature is re-adjusted to a level 0.5°C to 1°C below the freeze temperature of the cell. When this temperature has been reached a cold rod is introduced into the re-entrant tube of the cell to initiate the freeze, giving a plateau that can be maintained for between 12 and 24 hours.

2. The thermometers are removed from their storage rack and placed in the pre-heating furnace. The furnace is slowly heated to 600°C (if the cell is aluminium) and 900 or 950°C (if the cell is silver or copper).

   During conditioning, thermometers are protected from contamination by a slow air flux around them.

3. Thermometers are transferred individually to the cell for 20 to 30 minutes, for calibration and then returned to the annealing furnace.

4. When all the thermometers have been calibrated and have been returned to the annealing furnace, they are slowly cooled to 450°C at which stage they can safely be exposed to room temperature and, when cool, measured at the triple point of water. Throughout the time the thermometers are above 450°C temperature changes are slow, which prevents strain and the flow of air prevents contamination at high temperatures.

CALIBRATION APPARATUS FOR INDIUM AND TIN FIXED POINTS

INTRODUCTION

Before calibrating a standard platinum resistance thermometer, it is usual to check its water triple point resistance value and then to anneal the thermometer. The annealing temperature varies typically between 400 and 700°C.

DESCRIPTION

The new calibration apparatus developed by Isotech not only allows you to create and maintain the ITS 90 freezing points of indium and tin using a water heat-pipe, but also provides a second furnace for annealing thermometers at temperatures up to 700°C.

Complementary features of the apparatus are a pre-heating tube, maintained at the cell temperature, and a rack for storage of up to 4 thermometers at approximately ambient temperature.

METHOD OF OPERATION

1. By adjusting the set-point to a few degrees above the appropriate melting point, the cell, (tin or indium) is melted in the essentially temperature-gradient-free water-filled heat-pipe. When the cell's contents are completely melted, the heat-pipe temperature is re-adjusted to a level 0.5°C below the freeze temperature of the cell. When this set-point has been reached, a cold rod is introduced into the re-entrant tube of the cell to initiate the freeze, giving a plateau that can be maintained for between 12 and 24 hours. A modified technique is appropriate for tin, in the form of an applied thermal shock to the whole cell to counteract the tendency for a slow, large undercool to occur.

2. The thermometers are removed from their rack and, assuming they have already been annealed and are stable, are placed successively in the pre-warming tube for 5 minutes and then transferred to the cell for calibration. After 20 to 30 minutes the thermometer can be removed slowly from the cell and, after cooling to room temperature, the R_{TPW}-value can be checked.

ELIMINATING CONTAMINATION DURING THE CALIBRATION OF HIGH TEMPERATURE THERMOMETERS

It is quite feasible to heat a high temperature thermometer to 1000°C and return it to ambient temperature without altering the water triple point resistance value by more than 0.5mK equivalent.

Instructions in the Isotech 962 and 96178 thermometer manuals explain how to handle and keep clean the thermometers. It is imperative that procedures are followed because contaminants can penetrate and pass through physically-intact quartz sheaths at temperatures above 800°C.

CELL HANDLING

In order to facilitate introduction to, and removal from the furnace, Isotech can provide for each cell, supplementary equipment largely comprising an Inconel basket with detachable handle.

To prevent the cell-surface becoming discoloured, it is recommended that, before using the cell, the basket and insulation be placed in the furnace and the furnace be taken to above the cell working temperature for at least 2 hours. This operation outgases the basket and insulation, which may smoke and discolour during this first temperature excursion. The cell can then be inserted into the basket in readiness for use. If removing the cell with a thermometer in its pocket (e.g. tin cell), extreme caution is necessary in applying support by means of the diametrically-pivoted handle. The handle will need to be maintained in a non-vertical plane while being used for removing and replacing the assembly.

CELL KIT

Basket, handles, discs of ceramic insulation, Inconel baffles and platinum foil discs if required.

Sketches show the recommended assembly of the cell basket (and insulation discs) in a furnace core.

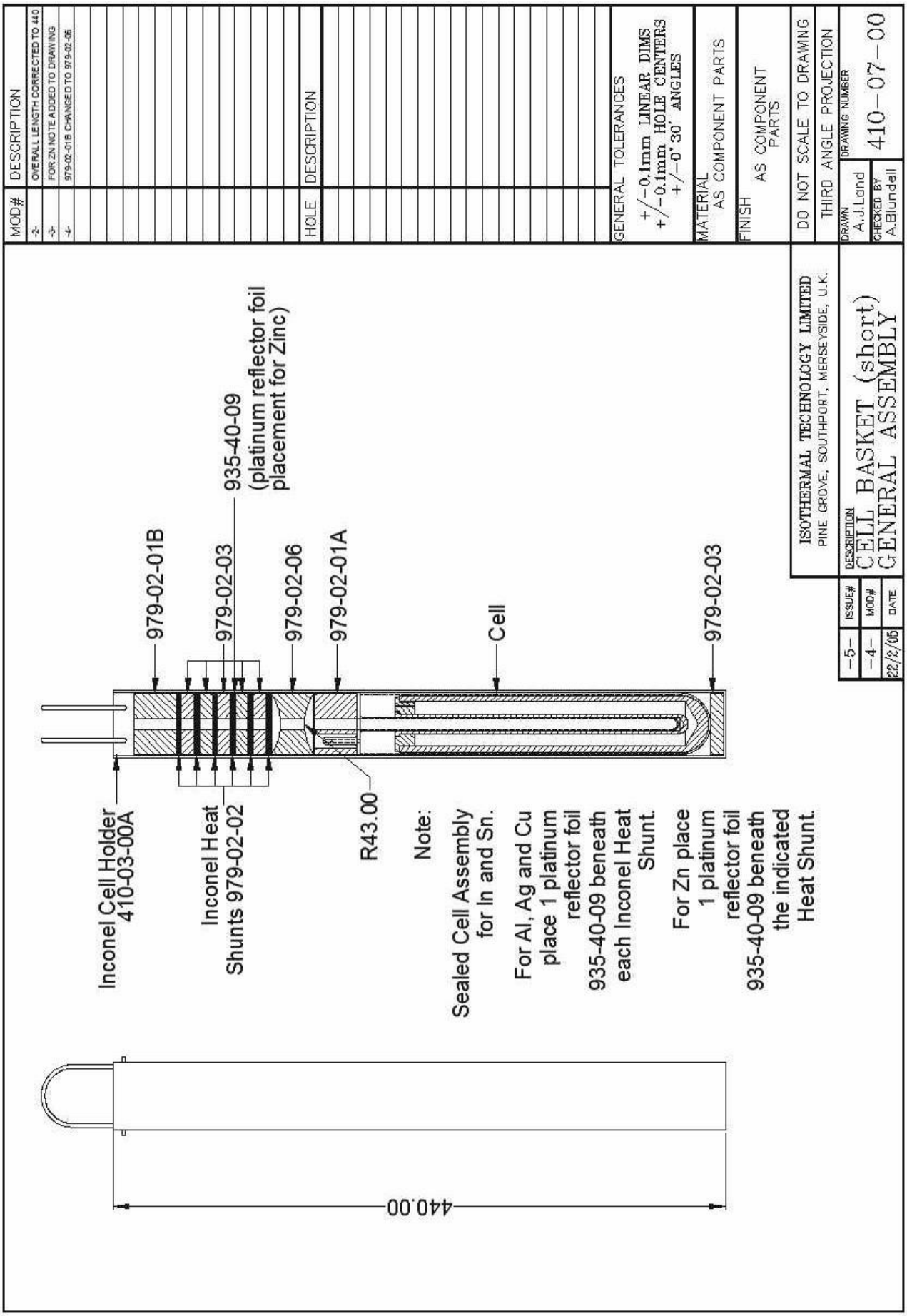
MOD# DESCRIPTION
-2- OVERALL LENGTH CORRECTED TO 440
-3- FOR ZN NOTE ADDED TO DRAWING
-4- 979-02-01B CHANGED TO 979-02-06
HOLE DESCRIPTION
GENERAL TOLERANCES
+/-0.1mm LINEAR DIMS
+/-0.1mm HOLE CENTERS
+/-0° 30' ANGLES
MATERIAL
AS COMPONENT PARTS
FINISH
AS COMPONENT PARTS
DO NOT SCALE TO DRAWING
THIRD ANGLE PROJECTION
DRAWN A.J.Land
CHECKED BY A.Blundell
DRAWING NUMBER 410-07-00
ISOTHERMAL TECHNOLOGY LIMITED
PINE GROVE, SOUTHPORT, MERSEYSIDE, U.K.
-5- ISSUE#
-4- MOD#
22/2/05 DATE
DESCRIPTION
CELL BASKET (short)
GENERAL ASSEMBLY
979-02-01B
979-02-03
935-40-09
(platinum reflector foil
placement for Zinc)
979-02-06
979-02-01A
Cell
979-02-03
Inconel Cell Holder
410-03-00A
Inconel Heat
Shunts 979-02-02
R43.00
Note:
Sealed Cell Assembly
for In and Sn.
For Al, Ag and Cu
place 1 platinum
reflector foil
935-40-09 beneath
each Inconel Heat
Shunt.
For Zn place
1 platinum
reflector foil
935-40-09 beneath
the indicated
Heat Shunt.
440.00

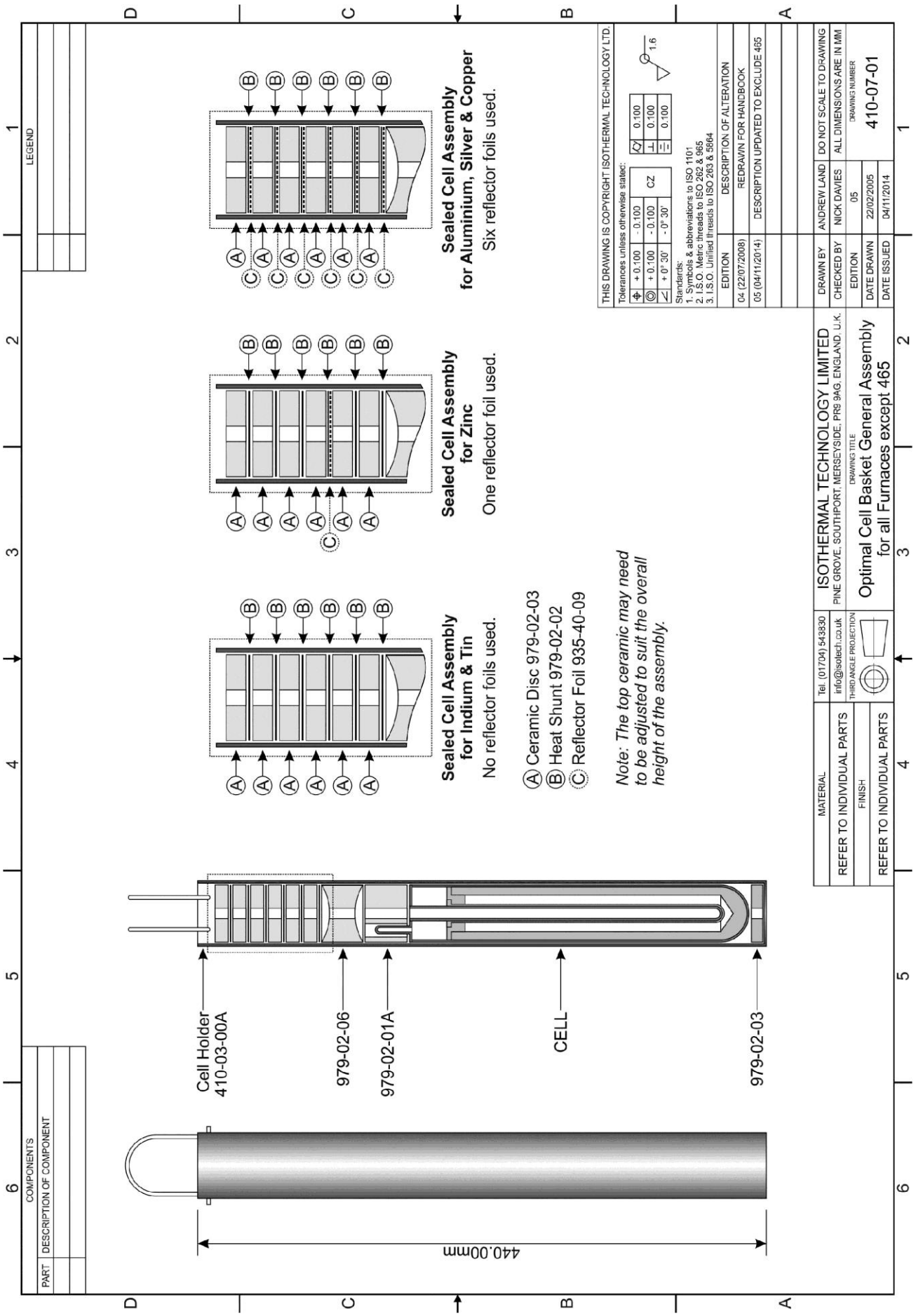
Sealed Cell Assembly for Aluminium, Silver & Copper
Six reflector foils used.
Sealed Cell Assembly for Zinc
One reflector foil used.
Sealed Cell Assembly for Indium & Tin
No reflector foils used.
Ⓐ Ceramic Disc 979-02-03
Ⓑ Heat Shunt 979-02-02
Ⓒ Reflector Foil 935-40-09
Note: The top ceramic may need to be adjusted to suit the overall height of the assembly.
THIS DRAWING IS COPYRIGHT ISOTHERMAL TECHNOLOGY LTD.
Tolerances unless otherwise stated:
+ 0.100 - 0.100
+ 0.100 - 0.100 CZ
+ 0° 30' - 0° 30'
0.100
0.100
0.100
1.6
Standards:
1. Symbols & abbreviations to ISO 110/1
2. I.S.O. Metric threads to ISO 262 & 965
3. I.S.O. Unified threads to ISO 263 & 5864
EDITION
DESCRIPTION OF ALTERATION
04 (22/07/2008)
REDRAWN FOR HANDBOOK
05 (04/11/2014)
DESCRIPTION UPDATED TO EXCLUDE 465
DRAWN BY
ANDREW LAND
DO NOT SCALE TO DRAWING
CHECKED BY
NICK DAVIES
ALL DIMENSIONS ARE IN MM
EDITION
05
DRAWING NUMBER
DATE DRAWN
22/02/2005
410-07-01
DATE ISSUED
04/11/2014
ISOTHERMAL TECHNOLOGY LIMITED
PINE GROVE, SOUTHPORT, MERSEYSIDE, PR9 9AG, ENGLAND, U.K.
Tel. (01704) 543830
info@isotech.co.uk
THIRD ANGLE PROJECTION
DRAWING TITLE
Optimal Cell Basket General Assembly for all Furnaces except 465
MATERIAL
REFER TO INDIVIDUAL PARTS
FINISH
REFER TO INDIVIDUAL PARTS
LEGEND
COMPONENTS
PART
DESCRIPTION OF COMPONENT
Cell Holder 410-03-00A
979-02-06
979-02-01A
CELL
979-02-03
440.00mm

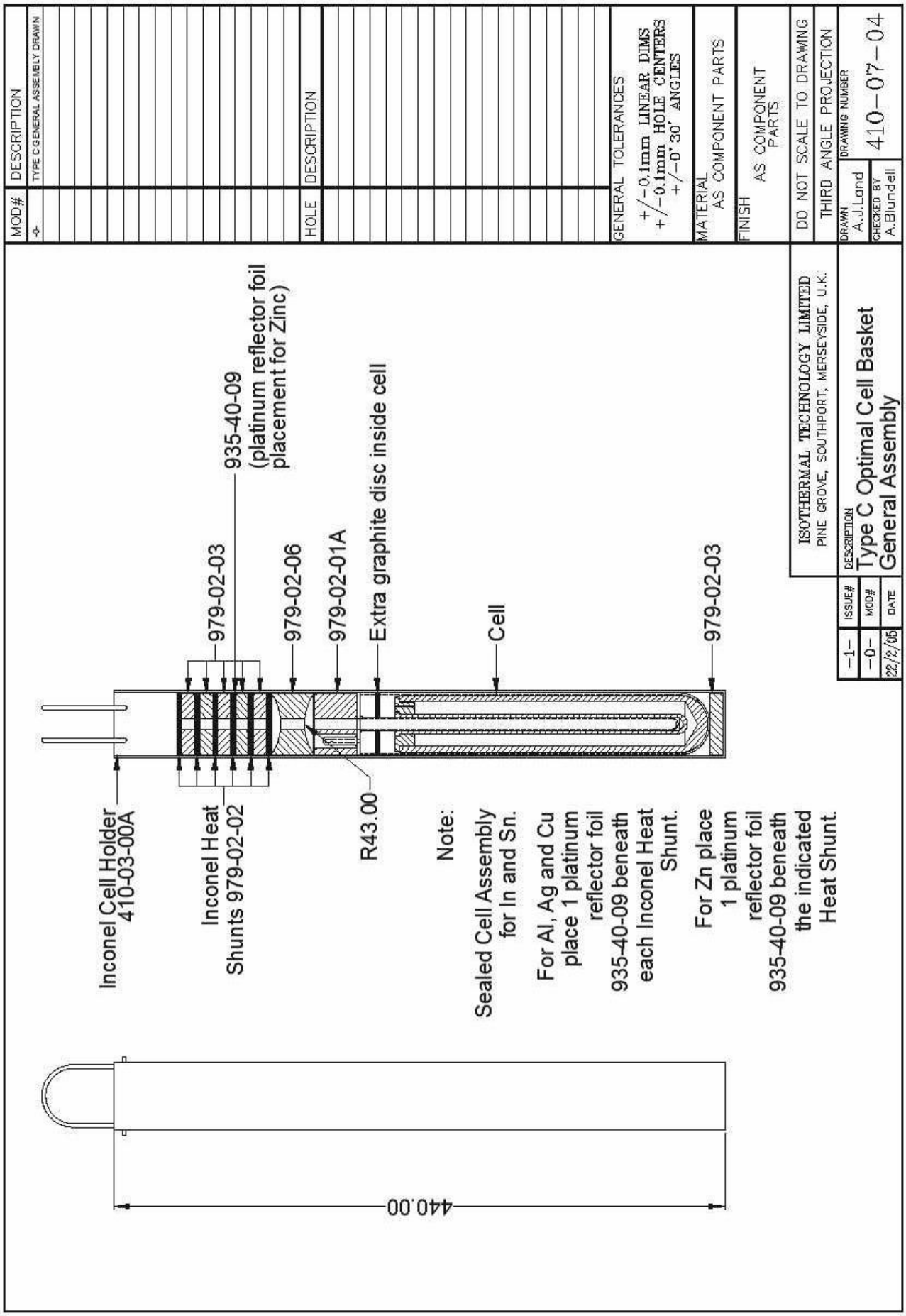
MOD# DESCRIPTION
-0- TYPE C GENERAL ASSEMBLY DRAWN
HOLE DESCRIPTION
GENERAL TOLERANCES
+/-0.1mm LINEAR DIMS
+/-0.1mm HOLE CENTERS
+/-0°30' ANGLES
MATERIAL
AS COMPONENT PARTS
FINISH
AS COMPONENT PARTS
DO NOT SCALE TO DRAWING
THIRD ANGLE PROJECTION
DRAWN A.J.Land
CHECKED BY A.Blundell
DRAWING NUMBER
410-07-04
ISOTHERMAL TECHNOLOGY LIMITED
PINE GROVE, SOUTHPORT, MERSEYSIDE, U.K.
-1- ISSUE#
-0- MOD#
22/2/05 DATE
DESCRIPTION
Type C Optimal Cell Basket
General Assembly
979-02-03
935-40-09
(platinum reflector foil
placement for Zinc)
979-02-06
979-02-01A
Extra graphite disc inside cell
Cell
979-02-03
Inconel Cell Holder
410-03-00A
Inconel Heat
Shunts 979-02-02
R43.00
Note:
Sealed Cell Assembly
for In and Sn.
For Al, Ag and Cu
place 1 platinum
reflector foil
935-40-09 beneath
each Inconel Heat
Shunt.
For Zn place
1 platinum
reflector foil
935-40-09 beneath
the indicated
Heat Shunt.
440.00

THERMOMETRIC FIXED POINTS; A TUTORIAL

The International Temperature Scale, the scale most used in science and industry, is based on a series of fixed point temperatures. Fixed points involve two-phase or three-phase equilibria of, ideally, pure materials to which constant temperature values have been assigned by primary thermometry. Defining fixed points are chosen to be as few in number as is consistent with the need to establish satisfactory interpolation procedures.

There are secondary reference points which, also, are two-phase or three-phase equilibria of very pure materials, whose temperature values have been established by measurements made with interpolation instruments calibrated at the defining fixed points. Secondary reference points are useful for the calibration of thermometers having total ranges shorter than the interpolation ranges of the Scale. Generally, secondary points are admitted to the Scale only if the material is generally available in high purity and if sufficient reproducibility of the equilibrium temperature has been confirmed by measurements made independently by a considerable number of investigators. An average value (weighted according to individual uncertainties) is then used as the ITS temperature value.

Two-phase equilibria may be solid-liquid, liquid-vapour, or solid-vapour. From the Phase Rule of Gibbs:

$$P + F = C + 2$$

P is an integer equal to the number of phases present, C is the number of components present - for a pure material C = 1 - and F is an integer representing the number of degrees of freedom. It is evident that the temperatures of two-phase equilibria are pressure-dependent (one degree of freedom only) whereas equilibria in which all three phases are present (triple points) are characterised by unique values of temperature and pressure (zero degrees of freedom).

A necessary condition to establish a triple point is to contain the appropriate material in a sealed enclosure from which all other materials, including air, have been evacuated, leaving a space to be filled by the vapour phase at a pressure appropriate to the temperature. When the three-phase (solid, liquid, vapour) condition has been established, these parameters will settle to their unique triple-point values.

The defining fixed points above 0°C are liquid-solid equilibria of high-purity metals. Pressure-dependence is small and thermal capacity and thermal conductivity are relatively high. Metals are generally available with a purity of 99.999% ("five-nines") or 99.9999% ("six-nines").

The metal is contained in a crucible of purified graphite, with a graphite cover and a graphite re-entrant sleeve. The crucible is enclosed in an envelope of fused quartz, which extends into the sleeve interior to form the thermometer well. The cell is charged with a pure metal, purged and filled with sufficient argon (or another inert gas) to give a pressure of 101kPa (1 standard atmosphere) at the freezing temperature and then sealed. Thus, it is at once protected from contamination and supplied with an inert atmosphere at the required pressure at the equilibrium temperature. A correction for the effect of change in ambient pressure on freezing point need not be made. Sealed cells of this type have shown no measurable change after 15 years of use.

In general, sealed fixed-point cells are used in vertical-tube furnaces which provide good temperature control and sufficient cell immersion to make axial temperature gradients, in the measurement zone, negligible. With the cell in the furnace, the controller is first set about 5°C above the anticipated value corresponding to the melting temperature of the metal in the cell. The onset of melting is indicated by a cessation of temperature rise because of the latent heat required to produce the phase change. This melt plateau can last for a considerable period of time. When melting is complete, the cell temperature will rise to the furnace temperature.

The furnace temperature is then reduced to a value slightly below the melt temperature. The temperature falls until the first solid nucleus of metal is formed, at which stage the temperature drop is arrested. With both liquid and solid metal present in the cell, a constant temperature is maintained by the latent heat released by the freezing metal. The controller temperature setting will cause the rate of heat egress from the cell to be relatively low, thus generating a freeze plateau that can usually be maintained for a number of hours, during which time thermometers may be calibrated.

A variation on this is the establishment of the triple point of mercury. Since this temperature is below normal ambient, the apparatus in which the point is realised must provide refrigeration as well as controlled heat. A separate manual describes the use of this apparatus.

Another variation is the realisation of the melting point of gallium. This metal is used on the melt plateau rather than on the freeze plateau. A separate manual describes the use of the apparatus for realising this fixed point.

There are, unfortunately, no convenient metal freeze points or triple points at the cryogenic end of the Scale. The defining point applicable to long stem thermometers at the low end of their useful range is the triple point of argon. In practice, the difficulties of setting up conditions to facilitate this measurement can conveniently be circumvented by carrying out the alternative procedure of comparison calibration, in which the thermometer is compared, in an environment of boiling nitrogen, to a similar thermometer which possesses a calibration traceable to national standards. A separate manual describes the nitrogen boiling point apparatus.

The temperature at which the change of phase occurs at atmospheric pressure is specific to the upper, exposed, surface of the metal. However, it is not feasible (because of the temperature gradient in this locality of the thermometer well) to obtain an accurate measurement under this condition. The closest approach to temperature uniformity demands insertion of the thermometer to the foot of the well with the consequence that the change-of-phase temperature measured is influenced by the static pressure head of the column of metal above the effective level of the thermometer sensing element.

Corrections that are used to enable measured phase-change temperatures to be converted to values that would pertain at 1 standard atmosphere pressure, for the various metals (and for mercury and water at their triple points), are given in the table. For a given column height (of the order of 200mm for Isotech sealed freeze point cells), the correction will be proportional to metal density and to a coefficient expressing the sensitivity to pressure of the phase-change temperature. The sign of this coefficient will depend on whether the metal contracts or expands on freezing.

DEFINING FIXED POINTS AND RELATED DATA

FIXED POINT	ITS 90 TEMPERATURE		PRESSURE COEFFICIENT		ITL CELL DESIGNATION	SUITABLE APPARATUS FOR CELL OPERATION
	°C	K	mK/ bar	mK/m HEAD OF SUBSTANCE		
ARGON TP	-189.3442	83.8058			(NOT AVAILABLE FROM ITL)	
MERCURY TP	-38.8344	234.3156	+5.4	+7.1	ITL-M-17724	ITL-M-17725
WATER TP	0.01	273.16	-7.5	-0.73	A11/50 or B11/50	ITL-M-18233
GALLIUM MP	29.7646	302.9146	-2.0	-1.2	ITL-M-17401	ITL-M-17402A
INDIUM FP	156.5985	429.7485	+4.9	+3.3	ITL-M-17668	ITL-M-17701/3/4/7
TIN FP	231.928	505.078	+3.3	+2.2	ITL-M-17669	ITL-M-17701/3/4/7
ZINC FP	419.527	692.677	+4.3	+2.7	ITL-M-17671	ITL-M-17701/2*/3/6
ALUMINIUM FP	660.323	933.473	+7.0	+1.6	ITL-M-17672	ITL-M-17702**/5/6
SILVER FP	961.78	1234.93	+6.0	+5.4	ITL-M-17673	ITL-M-17702**/5/6

NOTES:

1. TP = Triple Point, MP = Melting Point, FP = Freezing Point
2. Pressure corrections that apply to triple point and to other sealed-cell measurements are determined solely by the pressure head of material in the cell; variability of atmospheric pressure has no effect on the measurements.

* Furnace with potassium heat-pipe for zinc freezing point.

** Furnace with either potassium or sodium heat-pipe at aluminium and silver freezing points.

GENERAL NOTE ON ISOTECH METAL FREEZE POINT CELLS

Isotech freeze point cells contain metal that is 99.9999+% pure, except that aluminium cells may be filled with metal not less than 99.999% pure, depending upon the availability of aluminium in suitable physical form.

The metal is contained in crucibles of high-purity graphite. After machining the graphite, any residual metal oxides are removed by exposure to fluorine at a very high temperature. Graphite, even of high density, cannot be guaranteed to be non-microsporous. Some cells, in preparation or after use, will be seen to exude droplets or spicules of the contained metal on to the outer surface of the graphite crucible; some may show a film of metal. This is considered not to be a defect of the cell; it does not reduce its useful life nor change its equilibrium plateau temperature.

The cell is a fragile device. Although it is as rugged as is consistent with its materials and purpose, it must still be regarded as a kilogram, or more, of mass, loosely contained in a frangible shell. Cells should never be inverted, although they may be slowly turned to the horizontal and laid on their sides. Transporting cells by common carrier is not recommended and, as furnished, they must be hand-carried. A broken cell cannot, in general, be repaired, although a cell which is broken but sufficiently intact to contain its metal can be used for some time if contamination is avoided.

Each cell can be supplied with an Inconel container or basket 400mm (16") in length, in which the cell should be placed to facilitate removal from the furnace. The basket has two diametrically-opposite holes near its upper end in which a wire handle of suitable material (for example, 14 SWG Nichrome) may be temporarily attached. It is urged that the basket always be used with tin cells, because the recommended practice includes removal of the cell from the furnace as part of the freeze cycle.

PRECAUTIONS TO PREVENT DEVITRIFICATION OF QUARTZ ENVELOPES

The crucibles (containing the metal) of Isotech sealed fixed point cells are encased in an envelope of pure fused quartz, whose purpose is to avoid contamination of the enclosed metal, by foreign metal ions or oxygen. To this end, it contains an inert gas whose pressure is 1 standard atmosphere at the metal freezing temperature.

Fused quartz is vitreous in nature but, like other glasses, can be stimulated to crystallise (devitrify) by external influences at high temperatures. The crystalline form is recognisable as a localised cloudy or milky appearance. Devitrification is progressive and irreversible.

Quartz glass which is the glass used to cover the silver and copper cells has an annealing (softening) temperature of 1050°C. Some 35°C below the copper melt point.

A user should not therefore be surprised if his copper cell begins to devitrify at these elevated temperatures.

A devitrified cell can no longer be assumed to be gas-tight. It may leak its enclosed gas and atmospheric air may leak into it. The pressure at the freeze point may, as a consequence, be incorrect and, more seriously, contamination may occur.

Silver and especially copper cells should be regularly checked by immersing them in clean hot water to make sure there are no leaks.

If a leak is detected the cell should be returned to Isotech for a new quartz cover.

Sealed quartz cells can be used for thousands of hours without devitrification if precautions are taken to ensure that the outside surface is scrupulously clean before raising them to temperature. Any surface dirt, a water spot or a single fingerprint is a potential seed for devitrification. Before exposing to high temperature, the exterior of the cell should be cleaned with a suitable alcohol such as ethanol and then thoroughly wiped dry with clean tissue. (Similarly, SPRT's to be inserted into the cell's re-entrant tube should be previously cleaned in this way).

It is advisable to handle cells with clean cloth gloves.

The precaution applies particularly to cells for use at temperatures in excess of 500°C, although Isotech advises that all cells be carefully cleaned before use.

GENERAL COMMENT

The use of freeze-point cells embodies one of nature's simplest and most predictable phenomena. However, the technique (requiring association of cells with other equipment) involves subtlety and operator sensitivity. Before relying upon measurements made in them, the operator should perform enough freezes to become familiar with the cell, furnace, control, monitoring thermometer and readout (as a system) to ensure that the melt is clearly identifiable and sufficiently consistent.

SEALED METAL FREEZING POINT CELL

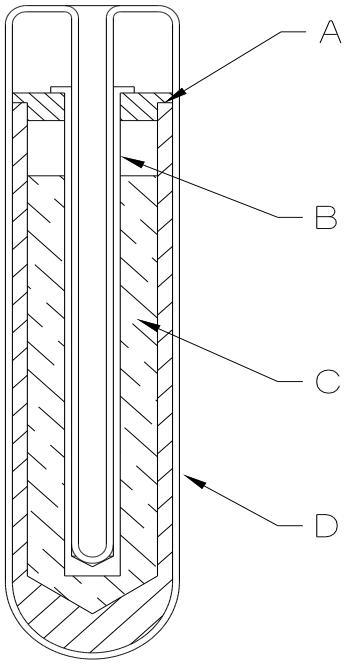

A High-purity graphite crucible and cover

B High-purity graphite sleeve

C High-purity metal

D Fused-quartz envelope, filled to give a pressure of 1 standard atmosphere at the metal freezing temperature.

SEALED METAL FREEZING POINT CELL BODY DIMENSIONS

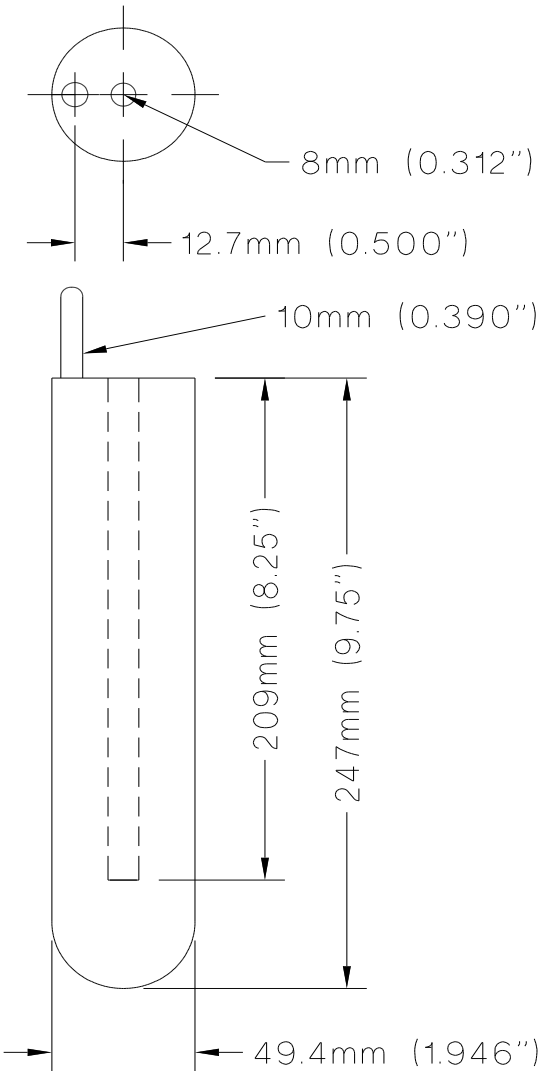

ACKNOWLEDGEMENT

The Isotech dual furnace owes its origin to Dr. P. Marcarino of Italy. His research and development solved many of the problems of contamination and handling of high temperature thermometers.

ISOTECH I-CAL EASY

This application allows logging of data from the furnace. Additionally, if a license is purchased it allows for fully automatic calibration including certificate printing and the calculation of coefficients.

Refer to the Isotech I-Cal EASY handbook and help system for more details

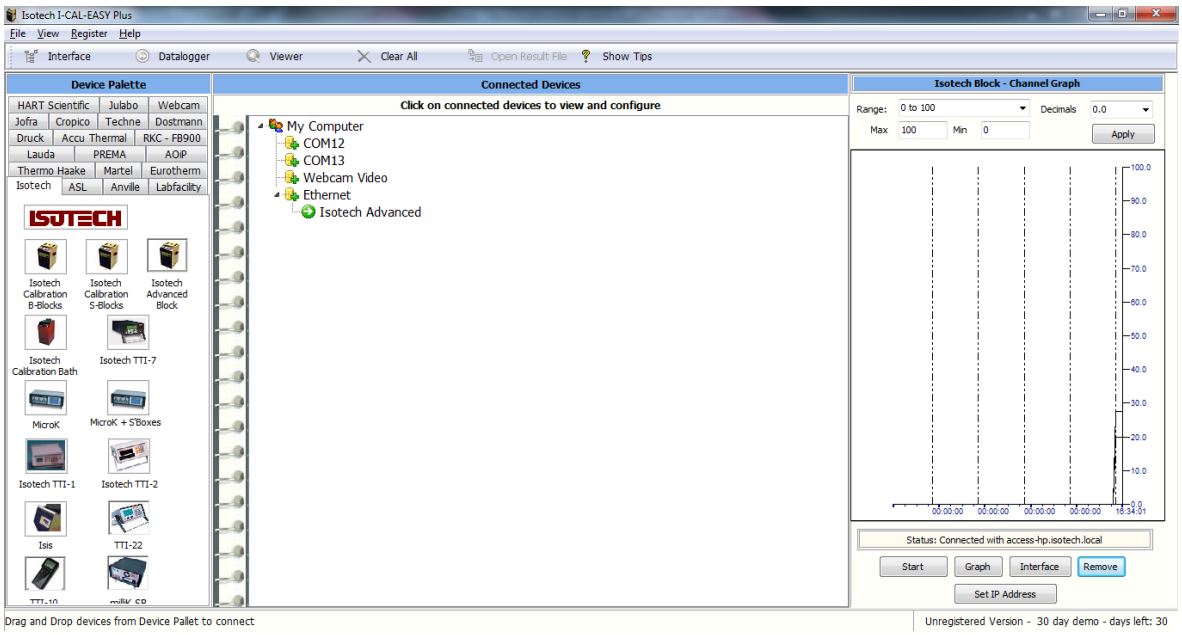

PROGRAM EDITOR

This allows set point programs to be created on a PC and uploaded to the furnace.

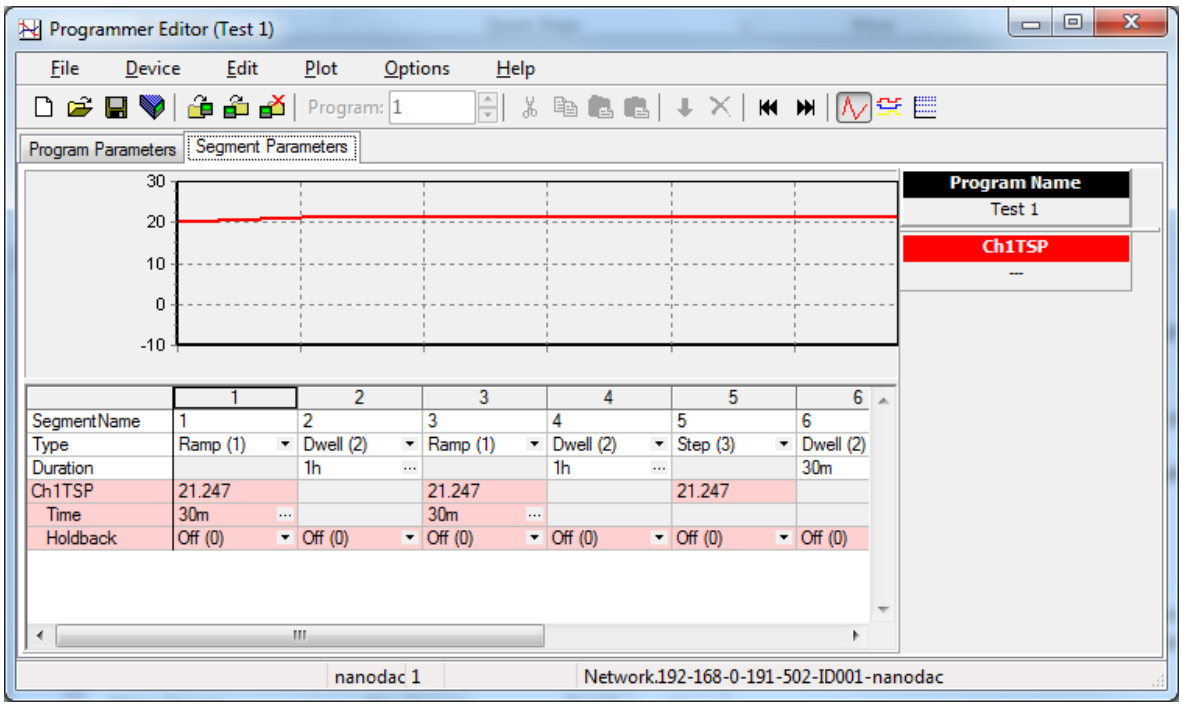

Installation instructions are included with the download

REVIEW

This is a proprietary software package which allows the user to extract ‘archive’ data from one or more furnaces and to present this data on a host computer, as if on a chart, or as a spreadsheet.

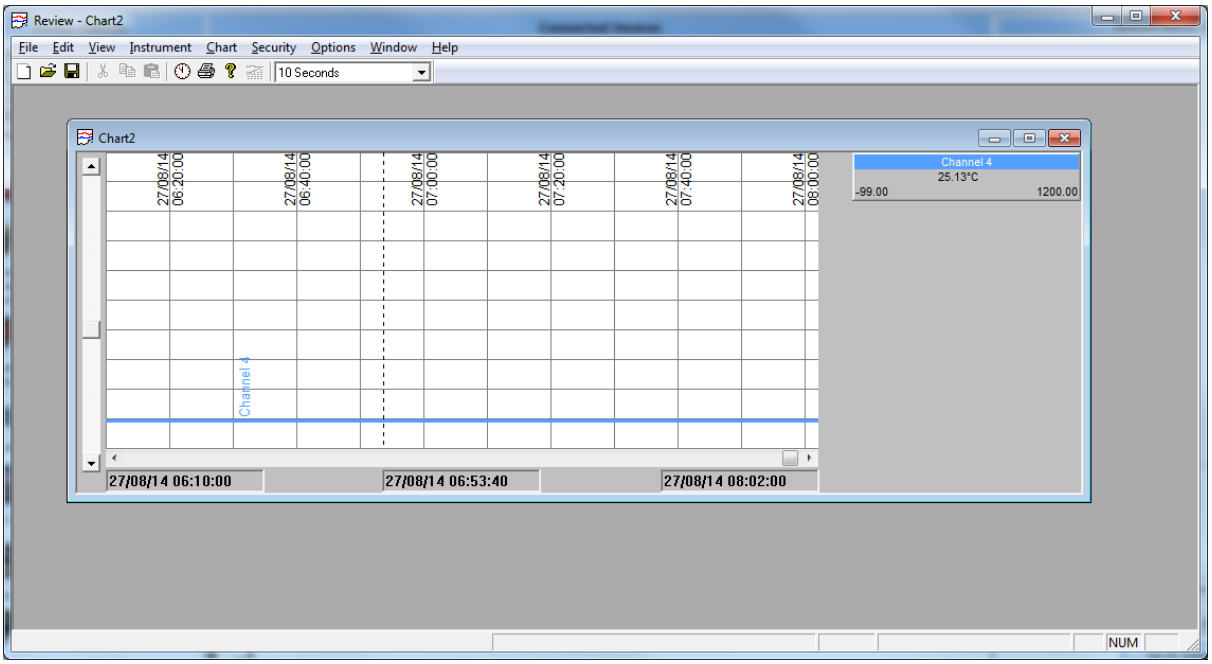

As described in the Review help system, ‘Review’ allows the user to set up a regular transfer of data (using ftp) from connected instruments into a database on the pc, and then from this database to the chart or spreadsheet. The chart/spreadsheet can be configured to include one or more ‘channels’ from one or all connected instruments.

It is also possible to archive instrument history files to a memory stick and to use this to transfer the data to the pc.

The user name and password are both ‘history and they are not editable.

These applications can be downloaded from the Isotech website http://www.isotech.co.uk/downloads

Connection to the unit is via the Ethernet interface, configure the IP address to suit your network and then select that IP address in the software. Consult your network manager for assistance if required.